A Review Investigation of The Usage Artificial Neural Networks on Air Pollution Modeling

ABSRACT

Air pollution is one of the most important problems that negatively impacts human health and disrupts the ecological balance by changing the atmosphere because of the pollutants formed as a result of natural events and human activities. This problem is growing because of the increase in population, the development of industrialization and urbanization. Pollutants that cause air pollution reaching the atmosphere directly without changing their form are sulfur dioxide (SO_2), hydrogen sulfide (H_2S), nitrogen monoxide (NO), nitrogen dioxide (NO_2), and carbon monoxide (CO), carbon dioxide (CO_2) and particulate matter. Secondary pollutants are formed by reacting with other substances in the atmosphere after leaving the source are sulfur trioxide (SO_3), sulfuric acid (H_2SO_4), ozone (O_3), aldehydes, peroxyacetyl nitrate (PAN), and heavy metals. Besides, air pollution causes acid rain, increases acidity in lakes, destroys forests, damages agricultural and animal products, and significantly disrupts the ecological balance, especially in industrial countries.

Therefore, this issue should be evaluated in many ways such as modeling to predict future episode, monitoring to assess present air pollution levels efficiently and taking preventive precautions with respect to these evaluations. Artificial neural networks are one of the mostly used artificial intelligence prediction techniques for prediction of air pollutant future concentrations. It uses multilayer perceptron technique which consists of at least three layers of nodes: an input layer, a hidden layer, and an output layer for estimating recent atmospheric events and air quality. This study aims to examine the studies on the use of artificial neural network models to predict air pollution concentrations accurately and swiftly. It has been proven that the application of this method for air pollution prediction allows the improving of prediction accuracy.

INTRODUCTION

Artificial neural networks are mathematical and graphical modeling of nerve cells (neurons) in the human brain in a computer environment. Learning algorithms used in artificial neural networks are also different from classical computer algorithms. These algorithms carry the intuitive power of the human brain. In environmental science and also business, medicine, industry, etc. are also used the fields. The ability to work with unknown relationships between predictive variables and predicted variables is the major advantage of this method. (Pawul & Śliwka, 2016) ANN is frequently used as a nonlinear tool in recent atmospheric and air quality prediction studies. (Feng, et al., 2015) ANN models have been very successful in predicting pollutants and their concentrations in varying time intervals.

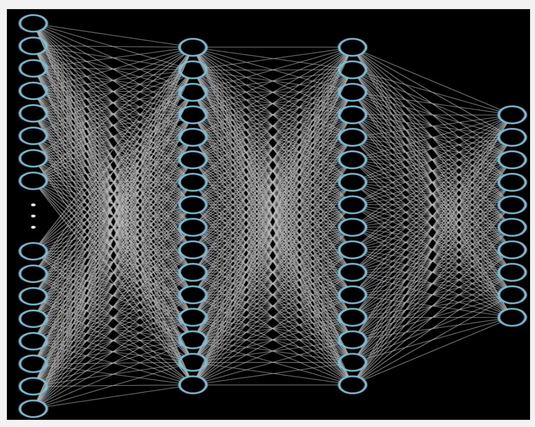

CONSTRUCTION OF ANN MODELS

In the modeling where Artificial Neural Networks will be used, the coordinates, surface area, climate information, population information, geographical location, wind, pressure, fog, humidity, temperature and precipitation information should be given. The information of the pollutant sources that cause air pollution in the study area should also be investigated. The basic structure of the neural network consists of three types of neuron layers (connected nodes). The first is the input layer where the data is introduced. The second is the hidden layer where the data is processed to extract the intermediate data necessary to determine the final solution. The hidden layer can be one or more. The third type of layer is the output layer where the results are produced. In the process of defining the multilayer neural network, first of all, it is necessary to determine the layer and the number of neurons in each layer. The number of neurons in the input layer is equal to the number of feature vector components. The number of neurons in the hidden layer depends on the complexity of the problem. If ANN is applied to more complex problems, more neurons are needed in the hidden layer. The number of neurons in the output layer is equal to the number of predefined classes (in the classification problem) or the number of output data (in the prediction problem).

Many types of artificial neural networks differ in structure and working principle; Fully connected feed-forward networks are known as multilayer perceptron (MLP) or radial basis function networks (RBF). Most researchers have studied using neural networks for short-term and long-term predictions of concentration levels of nitrogen oxides (NO_x) and particulate matter PM_{10} as factors determining the occurrence of smoke phenomena. In addition, estimations of the concentration levels of other air pollutants such as sulfur(IV) oxide were also made with ANN. All these estimations are based on meteorological data, measurement of air pollutant emissions, and many other data (humidity, precipitation, temperature, etc.)

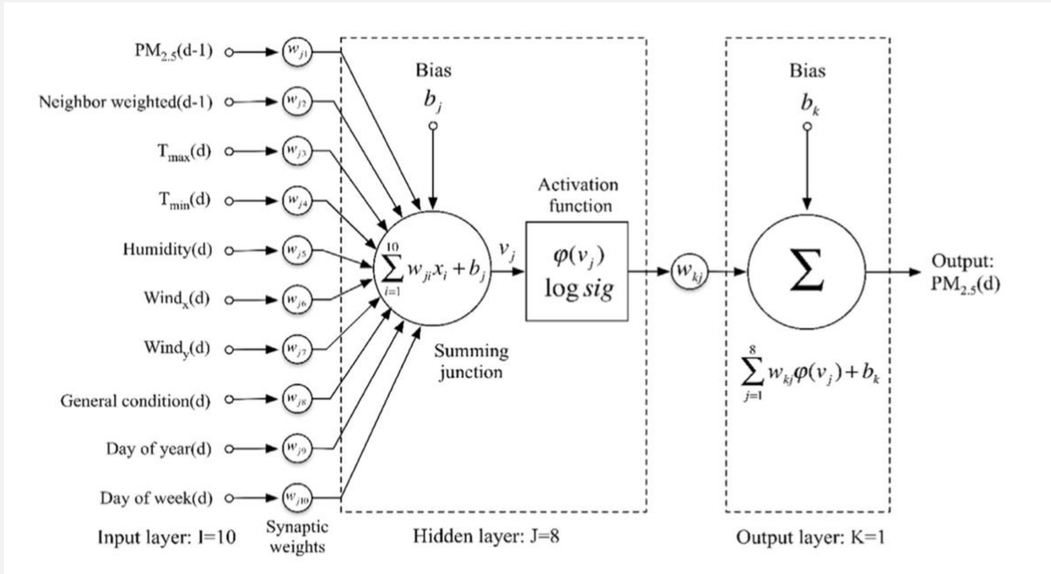

The architecture of the MLP type of neural network (10-8-1)

CONCLUSIONS

- To obtain good results, it is necessary to correctly select the input and output data, with a clear dependence between them. It is not possible to construct a universal neural network model that would allow the estimation of various pollutants in different domains. The network should be designed and trained for each case individually. Artificial Neural Networks have been a reliable method in achieving the targeted objectives in their applications on environmental pollutant models.
- Their characteristic feature is that they can be used to solve the problem in conditions of incomplete information, without knowledge of the analytical relationship between input and output data.
- The ability to work with unknown relationships between predictive variables and predicted variables is the major advantage of this method.

REFERENCES

Amil, M. (2005). Investigation of Spatial and Temporal Change of Ankara Air Quality. *Ataturk University Institute of Science and Technology Master Thesis*.

Bender, J., Hertstein, U., & Black, C. (1999). Growth and Yield Responses of Spring Wheat to Increasing Carbon dioxide, Ozone and Physiological Stresses: A Statistical Analysis of ESPACE Wheat Results. *European journal of Agronomy*.

Elkoca, E. (2003). Effects of air pollutants on plants. *Journal of Atatürk University Faculty of Agriculture*.

Eğri, M. (1997). The Effect of Meteorological Conditions on Air Pollution Parameters in Malatya City Center in Winter Period. *Journal of Turgut Özal Medical Center*.

Feng, X., Li, Q., Zhu, y., Hou, J., Jin, L., & Wang, J. (2015). Artificial neural networks forecasting of PM2.5 pollution using air mass trajectory based geographic model and wavelet transformation. *Atmospheric Environment*(107), 118-128.

Gardner, M., & Dorling, S. (1998). Artificial Neural Networks (the multilayer per- ceptron) e a Review of Applications in the Atmospheric Sciences. *Atmospheric Environment*.

Kunt, F. (2007). ARTIFICAL NEURAL NETWORKS (ANN), WAS USED IN MODELLING AND PREDICTING THE AIR POLLUTION. *M.Sc Thesis Graduate School of Natural and Applied Sciences Department of Environmental Engineering*. Konya, Turkey.

Pawul, M., & Śliwka, M. (2016). APPLICATION OF ARTIFICIAL NEURAL NETWORKS FOR PREDICTION OF AIR POLLUTION LEVELS IN ENVIRONMENTAL MONITORING. *Journal of Ecological Engineering*, 190-196.

Psaras, G., & Christodoulakis, N. (1987). Air Pollution Effects on the Structure of Citrus aurantium leaves. *Bulletin of Environmental Contamination and Toxicology*, 474-480.

Yücedağ, C., & Kaya, L. (2016). Effects of air pollutants on plants. *Journal of Mehmet Akif Ersoy University Institute of Science and Technology*.

Yüksek, A., Bircan, H., Zontul, M., & Kaynar, O. (2007). An Aplication of Neural Networks Applied on Whether Quality of Sivas. *C.U. Journal of Economics and Administrative Sciences*.